Cambridge International AS & A Level

Cambridge Assessment International Education
Cambridge International Advanced Subsidiary and Advanced Level

PHYSICS **9702/11**

Paper 1 Multiple Choice **October/November 2019**

1 hour 15 minutes

Additional Materials: Multiple Choice Answer Sheet
Soft clean eraser
Soft pencil (type B or HB is recommended)

8952989673

READ THESE INSTRUCTIONS FIRST

Write in soft pencil.
Do not use staples, paper clips, glue or correction fluid.
Write your name, centre number and candidate number on the Answer Sheet in the spaces provided unless this has been done for you.
DO **NOT** WRITE IN ANY BARCODES.

There are **forty** questions on this paper. Answer **all** questions. For each question there are four possible answers **A**, **B**, **C** and **D**.
Choose the **one** you consider correct and record your choice in **soft pencil** on the separate Answer Sheet.

Read the instructions on the Answer Sheet very carefully.

Each correct answer will score one mark. A mark will not be deducted for a wrong answer.
Any working should be done in this booklet.
Electronic calculators may be used.

This document consists of **20** printed pages.

© UCLES 2019

Data

speed of light in free space	$c = 3.00 \times 10^{8}\,\text{m s}^{-1}$
permeability of free space	$\mu_0 = 4\pi \times 10^{-7}\,\text{H m}^{-1}$
permittivity of free space	$\varepsilon_0 = 8.85 \times 10^{-12}\,\text{F m}^{-1}$
	$\left(\frac{1}{4\pi\varepsilon_0} = 8.99 \times 10^{9}\,\text{m F}^{-1}\right)$
elementary charge	$e = 1.60 \times 10^{-19}\,\text{C}$
the Planck constant	$h = 6.63 \times 10^{-34}\,\text{J s}$
unified atomic mass unit	$1\,\text{u} = 1.66 \times 10^{-27}\,\text{kg}$
rest mass of electron	$m_\text{e} = 9.11 \times 10^{-31}\,\text{kg}$
rest mass of proton	$m_\text{p} = 1.67 \times 10^{-27}\,\text{kg}$
molar gas constant	$R = 8.31\,\text{J K}^{-1}\,\text{mol}^{-1}$
the Avogadro constant	$N_\text{A} = 6.02 \times 10^{23}\,\text{mol}^{-1}$
the Boltzmann constant	$k = 1.38 \times 10^{-23}\,\text{J K}^{-1}$
gravitational constant	$G = 6.67 \times 10^{-11}\,\text{N m}^2\,\text{kg}^{-2}$
acceleration of free fall	$g = 9.81\,\text{m s}^{-2}$

© UCLES 2019

Formulae

uniformly accelerated motion	$s = ut + \frac{1}{2}at^2$ $v^2 = u^2 + 2as$
work done on/by a gas	$W = p\Delta V$
gravitational potential	$\phi = -\frac{Gm}{r}$
hydrostatic pressure	$p = \rho gh$
pressure of an ideal gas	$p = \frac{1}{3}\frac{Nm}{V}\langle c^2 \rangle$
simple harmonic motion	$a = -\omega^2 x$
velocity of particle in s.h.m.	$v = v_0 \cos \omega t$ $v = \pm\omega\sqrt{(x_0^2 - x^2)}$
Doppler effect	$f_o = \frac{f_s v}{v \pm v_s}$
electric potential	$V = \frac{Q}{4\pi\varepsilon_0 r}$
capacitors in series	$1/C = 1/C_1 + 1/C_2 + \ldots$
capacitors in parallel	$C = C_1 + C_2 + \ldots$
energy of charged capacitor	$W = \frac{1}{2}QV$
electric current	$I = Anvq$
resistors in series	$R = R_1 + R_2 + \ldots$
resistors in parallel	$1/R = 1/R_1 + 1/R_2 + \ldots$
Hall voltage	$V_H = \frac{BI}{ntq}$
alternating current/voltage	$x = x_0 \sin \omega t$
radioactive decay	$x = x_0 \exp(-\lambda t)$
decay constant	$\lambda = \frac{0.693}{t_{\frac{1}{2}}}$

© UCLES 2019

[Turn over

1 For which quantity is the magnitude a reasonable estimate?

A	frequency of a radio wave	500 pHz
B	mass of an atom	500 μg
C	the Young modulus of a metal	500 kPa
D	wavelength of green light	500 nm

2 The speed of a wave in deep water depends on its wavelength L and the acceleration of free fall g.

What is a possible equation for the speed v of the wave?

A $v = \sqrt{\left(\frac{gL}{2\pi}\right)}$ **B** $v = \frac{gL}{4\pi^2}$ **C** $v = 2\pi\sqrt{\left(\frac{g}{L}\right)}$ **D** $v = \frac{2\pi g}{L}$

3 The diagram shows two vectors X and Y, drawn to scale.

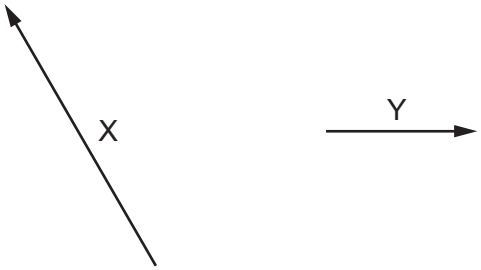

If X = Y – Z, which diagram best represents the vector Z?

A **B** **C** **D**

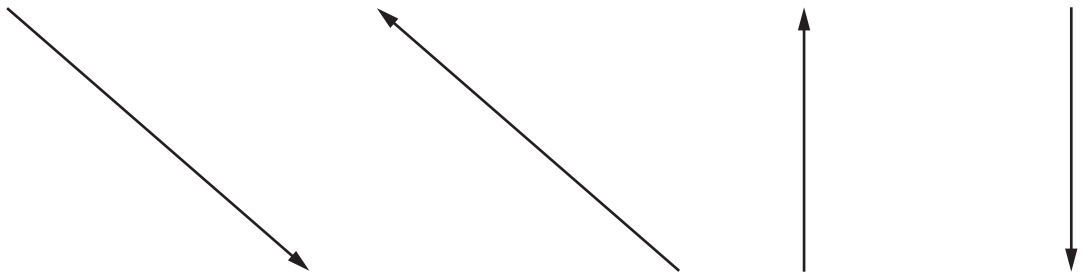

4 A student intends to measure accurately the diameter of a wire (known to be approximately 1 mm) and the internal diameter of a pipe (known to be approximately 2 cm).

What are the most appropriate instruments for the student to use to make these measurements?

	wire	pipe
A	calipers	calipers
B	calipers	micrometer
C	micrometer	calipers
D	micrometer	micrometer

5 The power P dissipated in a resistor of resistance R is calculated using the expression

$$P = \frac{V^2}{R}$$

where V is the potential difference (p.d.) across the resistor. The percentage uncertainty in V is 5% and in R is 2%.

What is the percentage uncertainty in P?

A 3% **B** 7% **C** 8% **D** 12%

6 The velocity-time graph for an object of mass 2.5 kg is shown.

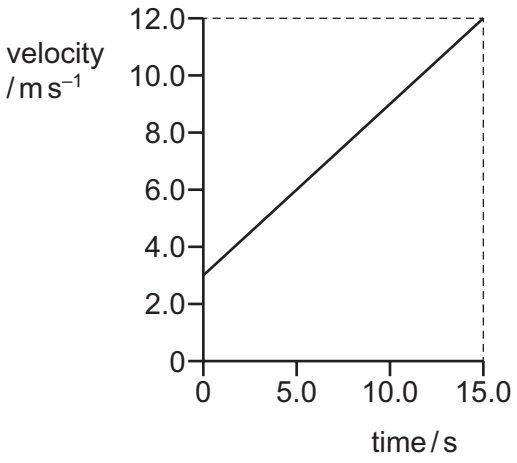

What is the resultant force acting on the object?

A 0.60 N **B** 0.80 N **C** 1.5 N **D** 2.0 N

7 Which statement follows directly from Newton's first law?

A A body remains at constant velocity unless acted upon by a resultant force.

B A satellite in circular motion about the Earth has a constant velocity.

C A water drop leaving a spinning umbrella travels at a constant velocity.

D The force acting on an object is equal to its change in momentum.

8 A resultant force causes an object to accelerate.

What is equal to the resultant force?

A the acceleration of the object per unit mass

B the change in kinetic energy of the object per unit time

C the change in momentum of the object per unit time

D the change in velocity of the object per unit time

9 A skydiver falls from an aircraft that is moving horizontally.

The vertical component of the velocity of the skydiver is v.

The vertical component of the acceleration of the skydiver is a.

Which row describes v and a during the first few seconds after the skydiver leaves the aircraft?

	v	a
A	constant	constant
B	constant	decreasing
C	increasing	constant
D	increasing	decreasing

© UCLES 2019

10 Two gliders are travelling towards each other on a horizontal air track. Glider P has mass 0.30 kg and is moving with a constant speed of $1.2\,m\,s^{-1}$. Glider Q has mass 0.60 kg and is moving with a constant speed of $1.8\,m\,s^{-1}$.

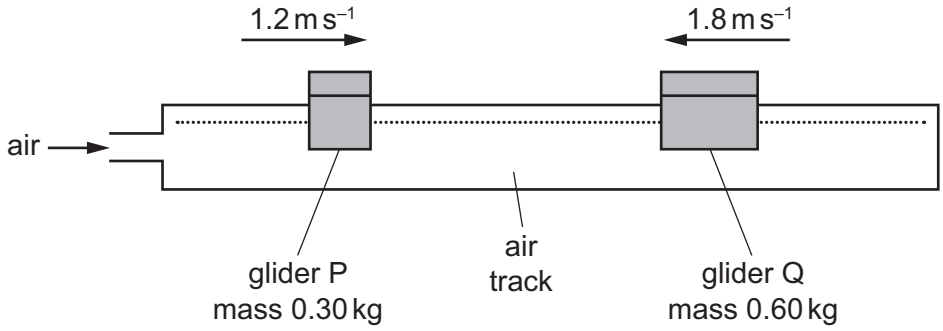

The gliders have a perfectly elastic collision.

What are the speeds of the two gliders after the collision?

	speed of P / $m\,s^{-1}$	speed of Q / $m\,s^{-1}$
A	1.2	0.6
B	2.0	1.4
C	2.8	0.2
D	3.6	0.6

© UCLES 2019

[Turn over

11 An object of weight W is suspended from a newton meter. When the object is completely immersed in water, the newton meter reads P. When the object is completely immersed in oil, the newton meter reads Q.

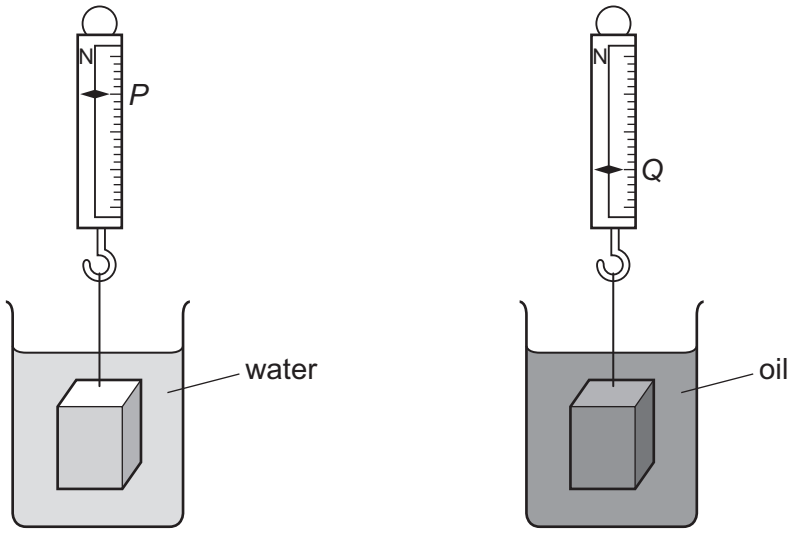

What is the ratio $\frac{\text{density of oil}}{\text{density of water}}$?

A $\frac{W-P}{Q-P}$ **B** $\frac{Q-P}{W-P}$ **C** $\frac{W-P}{W-Q}$ **D** $\frac{W-Q}{W-P}$

12 Which diagram shows a couple?

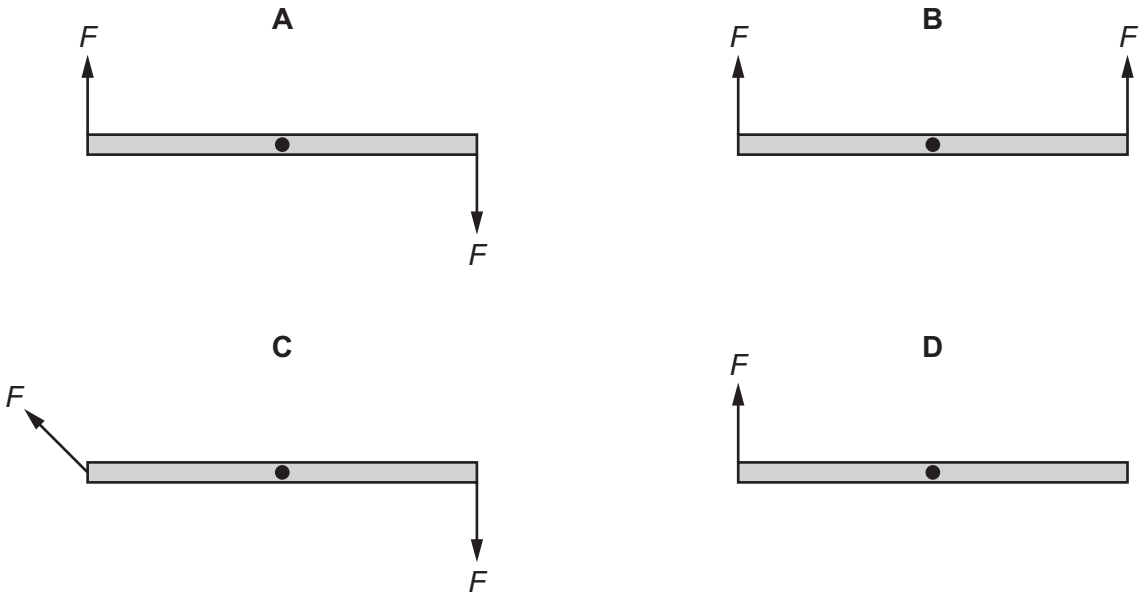

13 An object of weight 120 N is supported in equilibrium by two strings as shown.

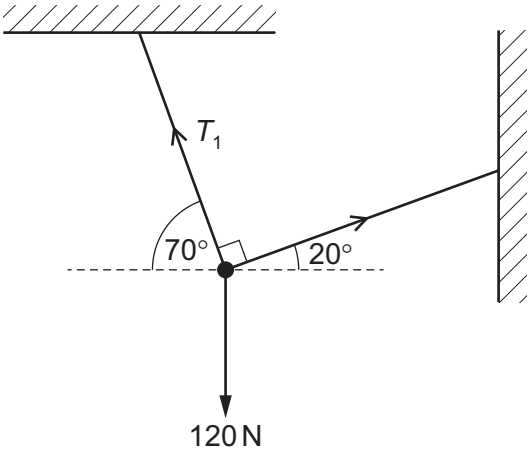

What is the tension T_1 in the left-hand string?

A 41 N **B** 77 N **C** 113 N **D** 128 N

14 In a large container in an oil refinery, three oils of different densities are mixed. No chemical activity occurs.

The mixture consists of:

1200 kg of oil of density 1100 kg m^{-3}

1500 kg of oil of density 860 kg m^{-3}

4000 kg of oil of density 910 kg m^{-3}.

What is the density of the mixture?

A 927 kg m^{-3} **B** 933 kg m^{-3} **C** 957 kg m^{-3} **D** 1045 kg m^{-3}

15 An electric motor produces 120 W of useful mechanical output power. The efficiency of the motor is 60%.

Which row is correct?

	electrical power input / W	waste heat power output / W
A	72	48
B	192	72
C	200	72
D	200	80

© UCLES 2019

16 A fixed amount of a gas undergoes a series of changes to its pressure and volume.

In two of the changes, no work is done by or on the gas. In one change work is done by the gas on its surroundings. In another change work is done on the gas by its surroundings.

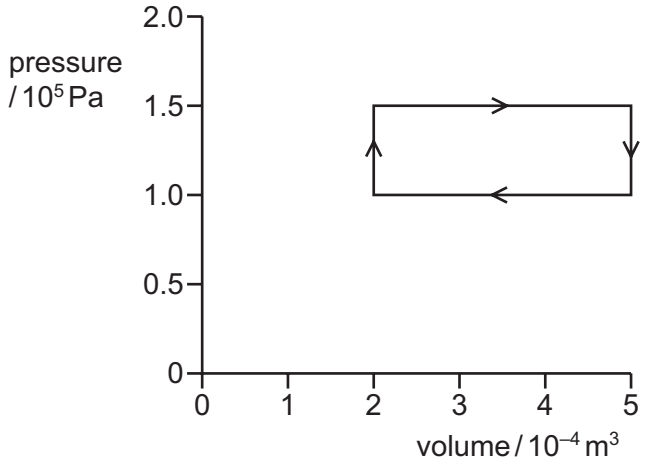

During the change when work is done on the gas by its surroundings, how much work is done on the gas?

A 15 J **B** 25 J **C** 30 J **D** 45 J

17 An object travelling with a speed of 10 m s^{-1} has kinetic energy 1500 J.

The speed of the object is increased to 40 m s^{-1}.

What is the new kinetic energy of the object?

A 4500 J **B** 6000 J **C** 24 000 J **D** 1 350 000 J

18 The engine of a car exerts a force of 600 N in moving the car 1.0 km in 150 seconds.

What is the average useful output power of the engine?

A 4.0 W **B** 4.0 kW **C** 90 kW **D** 90 MW

© UCLES 2019

19 An extension–force graph for a spring is shown.

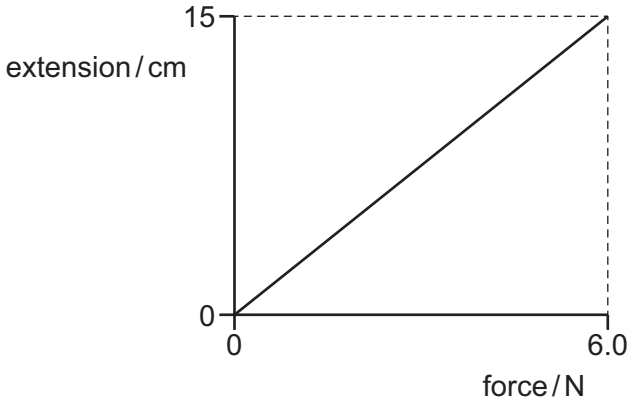

What is the spring constant of the spring?

A $0.025\,N\,m^{-1}$ **B** $0.40\,N\,m^{-1}$ **C** $2.5\,N\,m^{-1}$ **D** $40\,N\,m^{-1}$

20 A wire is extended by a force. The graph shows how the extension of the wire varies with the force applied.

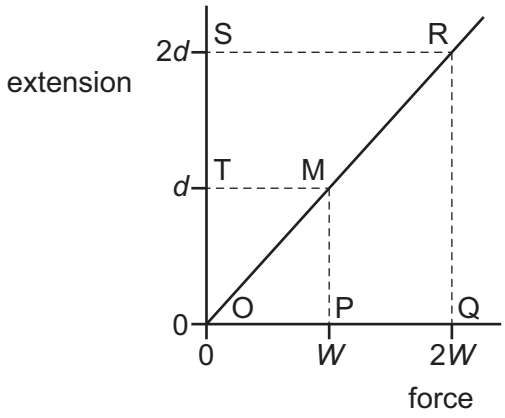

Initially a force W gives an extension d. The force is then increased to $2W$. This increases the extension to $2d$.

Which area of the graph represents the work done by the force when the force increases from W to $2W$?

A ORQ **B** OQRS **C** ORS **D** TMRS

21 A transverse wave on a rope has wavelength λ and period T.

The graph shows the variation of the displacement of the particles of the rope with distance in the direction of travel of the wave at time $t = 0$.

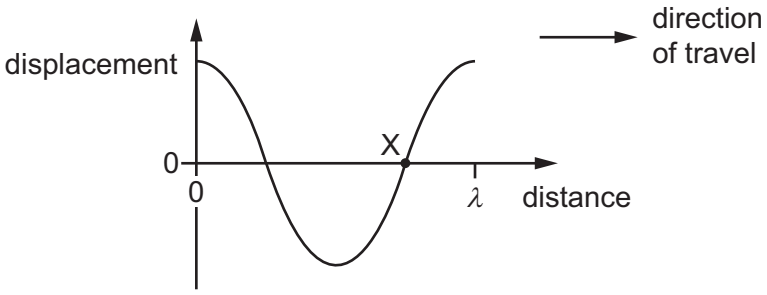

A particle X is labelled.

Which graph shows the variation of the displacement of particle X with time t?

A

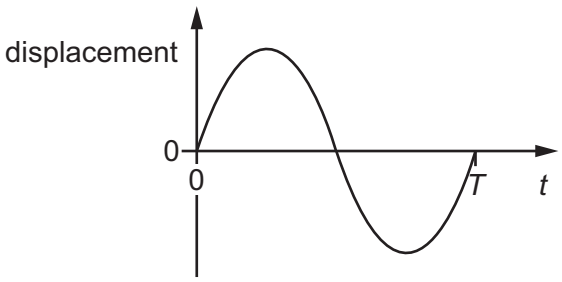

B

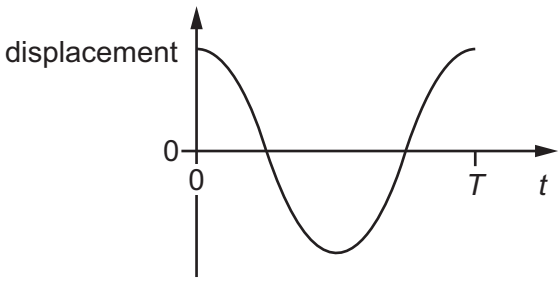

C

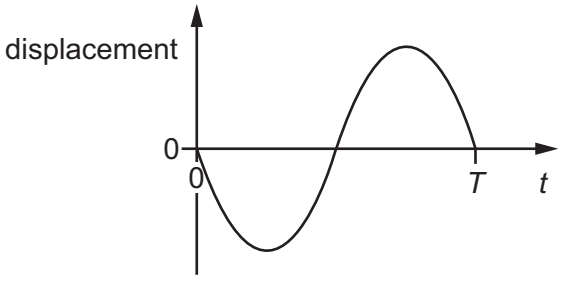

D

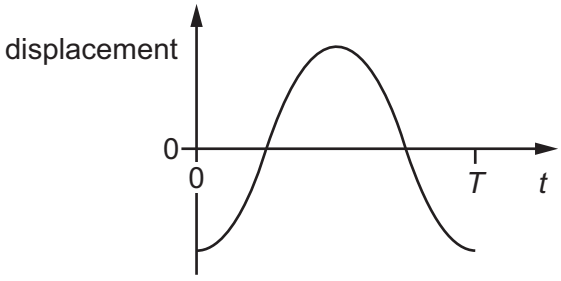

22 Which statement about all types of transverse waves is correct?

A They all have the same speed.

B They all have vibrations that are parallel to the direction of propagation of energy.

C They can all form stationary waves.

D They can all travel through a vacuum.

© UCLES 2019

23 Source S emits microwaves with a constant amplitude. The microwaves hit a metal screen P and are reflected. A stationary wave is formed between S and P. The wavelength of the microwaves is much smaller than the distance between S and P.

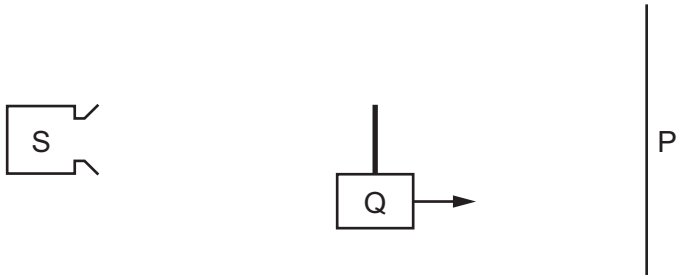

A detector Q is moved at a slow, constant speed from S to P.

What happens to the amplitude of the signal detected by Q?

A decreases steadily

B increases and decreases regularly

C increases steadily

D remains constant

24 The siren of a moving police car emits a sound wave with a frequency of 440 Hz. A stationary observer hears sound of frequency 494 Hz. The speed of sound in the air is 340 $m\,s^{-1}$.

What could be the speed and the direction of movement of the car?

A 37 $m\,s^{-1}$ directly towards the observer

B 37 $m\,s^{-1}$ directly away from the observer

C 42 $m\,s^{-1}$ directly towards the observer

D 42 $m\,s^{-1}$ directly away from the observer

25 An electromagnetic wave has a wavelength of 138 pm in a vacuum.

To which region of the electromagnetic spectrum does this wave belong?

A radio wave

B microwave

C visible light

D X-ray

26 Two wave pulses are travelling towards each other on a long rope. The pulses have the same amplitude and wavelength and are travelling at a speed of $0.50\,m\,s^{-1}$. The diagram shows the rope at time $t = 0$.

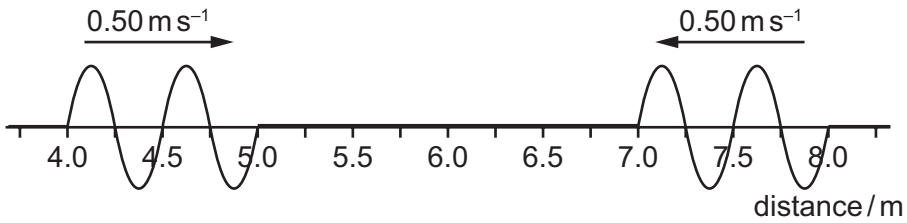

Which diagram shows the rope at time $t = 3.0\,s$?

A

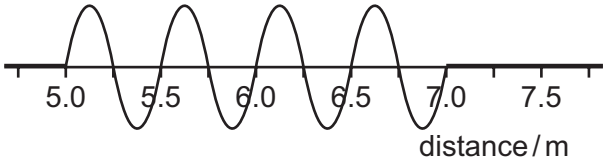

B

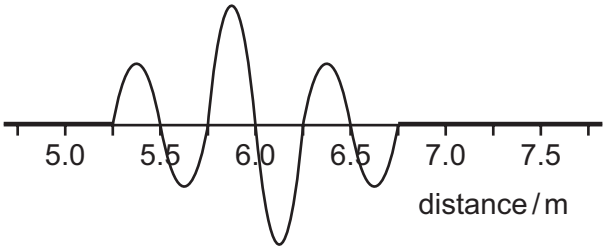

C

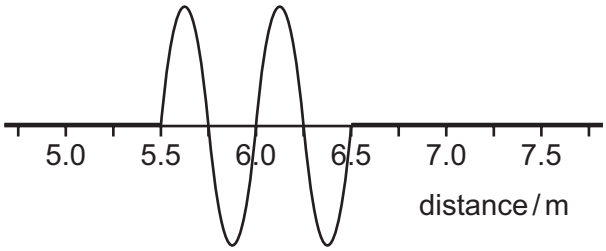

D

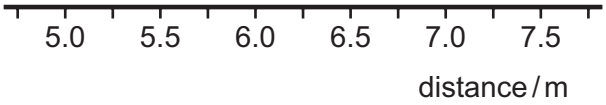

© UCLES 2019

27 Water waves of wavelength λ are incident normally on an obstacle with a narrow gap. The width of the gap is equal to λ. The waves from the gap emerge over an angle θ as shown.

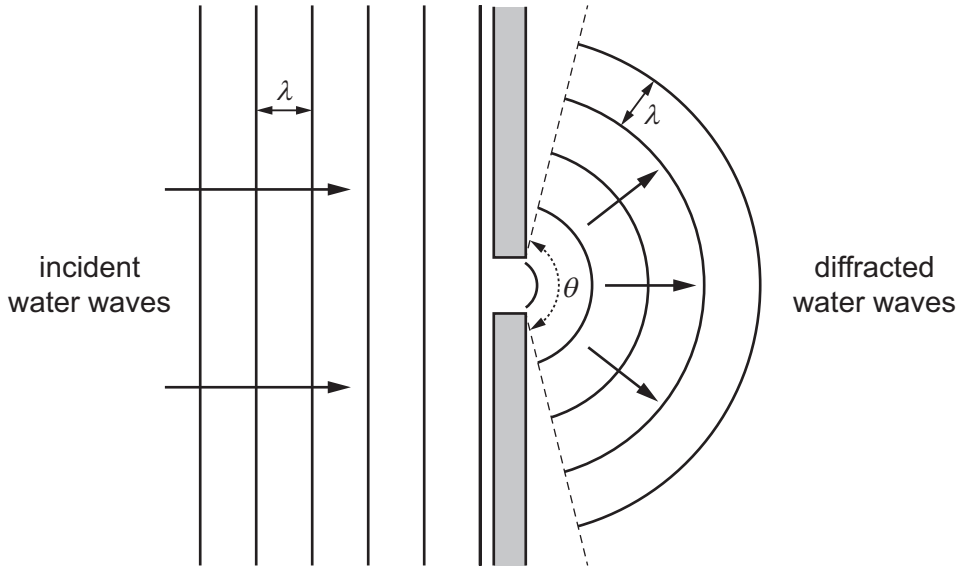

The gap is slowly widened.

Which changes, if any, occur to θ and to the wavelength of the emerging waves?

	θ	wavelength
A	decreases	remains the same
B	increases	remains the same
C	remains the same	decreases
D	remains the same	increases

28 Light of wavelength 720 nm from a laser X is incident normally on a diffraction grating and a diffraction pattern is observed. Light from a laser Y is then also incident normally on the same grating. The third-order maximum due to laser Y is seen at the same place as the second-order maximum due to laser X.

What is the wavelength of the light from laser Y?

A 480 nm **B** 540 nm **C** 720 nm **D** 1080 nm

29 Monochromatic light of frequency f is incident on a diffraction grating of line spacing d. The speed of light is c.

Which expression can be used to determine the highest order of intensity maximum produced by the grating?

A $n = \frac{d}{cf}$ **B** $n = \frac{df}{c}$ **C** $n = \frac{dc}{f}$ **D** $n = \frac{c}{df}$

© UCLES 2019

30 A metal plate of uniform thickness is connected to a cell as shown.

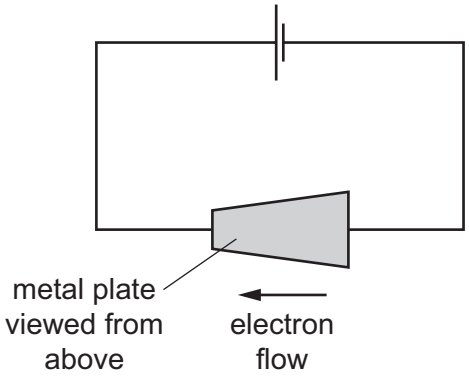

Electrons move clockwise around the circuit.

Which statement about the metal plate is correct?

A The average drift speed of the conduction electrons decreases as they move from right to left through the plate.

B The average drift speed of the conduction electrons increases as they move from right to left through the plate.

C The number density of the conduction electrons decreases from right to left through the plate.

D The number density of the conduction electrons increases from right to left through the plate.

31 The diagram shows the direction of the current in a metal block. The charge carriers enter the block through the face PQRS and leave the block through the opposite face.

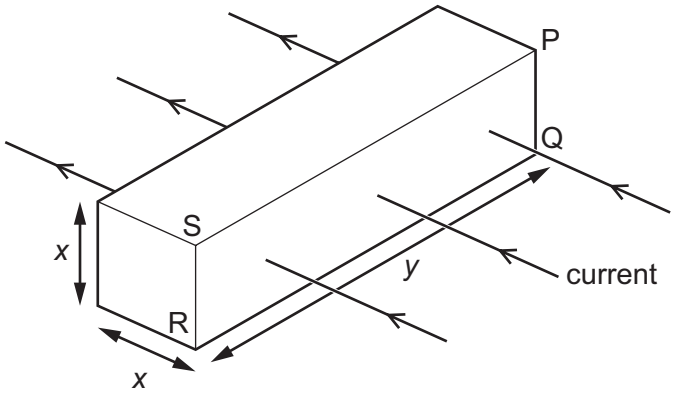

The number density of charge carriers is n. Each charge carrier has charge e. The average drift speed of the charge carriers is v.

Which expression gives the current in the block?

A $envx^2$ **B** $envxy$ **C** $envx^3y^2$ **D** $envx^4y$

© UCLES 2019

32 What could **not** be used as a unit of potential difference?

A $A\Omega$ **B** $N m^{-1} C^{-1}$ **C** $W A^{-1}$ **D** $(\Omega W)^{\frac{1}{2}}$

33 Which graph could show how the resistance R of a filament lamp varies with the applied potential difference (p.d.) V, as V is increased to the normal operating p.d.?

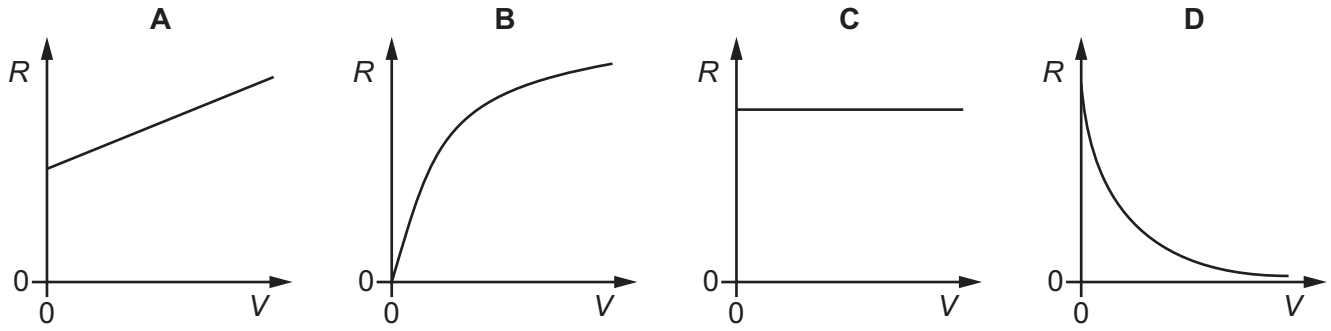

34 Kirchhoff's two laws for electric circuits can be derived by using conservation laws.

On which conservation laws do Kirchhoff's laws depend?

	Kirchhoff's first law	Kirchhoff's second law
A	charge	current
B	charge	energy
C	current	mass
D	energy	current

35 The diagram shows a circuit.

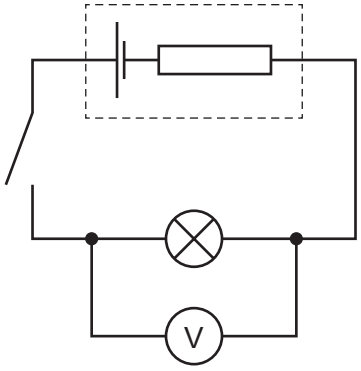

Which statement about the circuit is **not** correct?

A Electromotive force is the energy transferred per unit charge.

B Energy is transferred from chemical potential energy in the cell to other forms when the switch is closed.

C The electromotive force of the cell is greater than the terminal potential difference when the switch is closed.

D When the switch is open, the voltmeter measures the electromotive force of the cell.

36 The diagram shows a circuit containing four voltmeters. The readings on the voltmeters are V_1, V_2, V_3 and V_4. All the readings are positive.

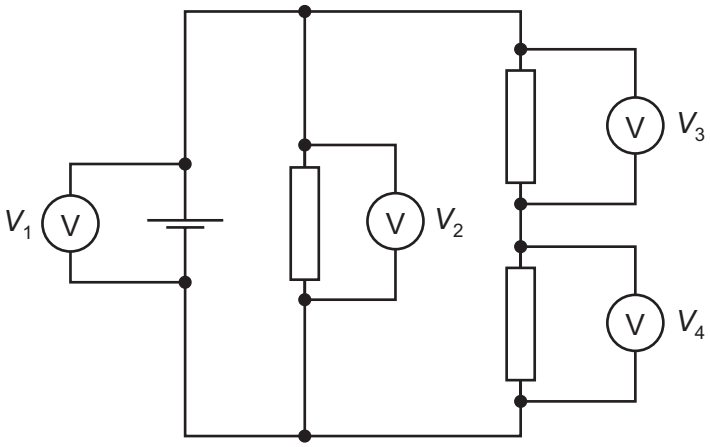

Which equation relating the voltmeter readings is correct?

A $V_1 = V_2 + V_4$

B $V_1 = V_2 + V_3 + V_4$

C $V_2 + V_3 = V_4$

D $V_3 + V_4 - V_2 = 0$

© UCLES 2019

37 A network consists of a 3.0 Ω resistor and two 6.0 Ω resistors, as shown.

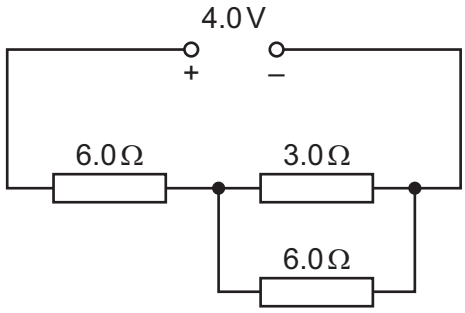

The potential difference (p.d.) across the network is 4.0 V.

What is the current through the 3.0 Ω resistor?

A 0.17 A **B** 0.25 A **C** 0.33 A **D** 1.3 A

38 In the circuit shown, all the resistors are identical and all the ammeters have negligible resistance.

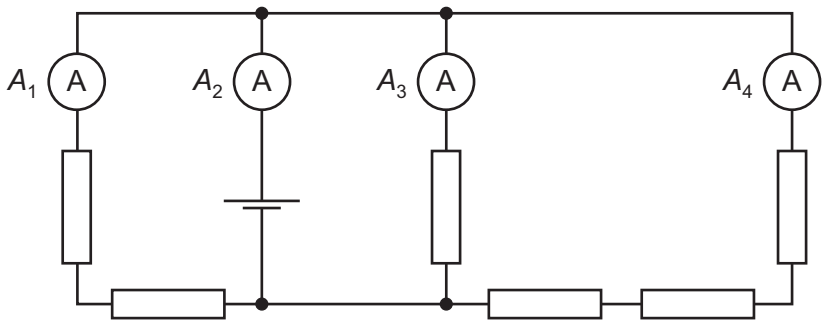

The reading A_1 is 0.6 A.

What are the readings on the other ammeters?

	A_2 / A	A_3 / A	A_4 / A
A	1.0	0.3	0.1
B	1.4	0.6	0.2
C	1.8	0.9	0.3
D	2.2	1.2	0.4

39 An unstable nucleus of an element decays by emitting an α-particle or a β^- particle to become a nucleus of a different element. This nucleus is also unstable and also emits an α-particle or a β^- particle. The process continues until an isotope of the original element is produced.

What is the minimum possible number of these particles emitted?

A 2 **B** 3 **C** 4 **D** 5

© UCLES 2019

40 The diagrams show the quark composition of four different hadrons. One of the hadrons is a Σ^+ particle. It has a charge of $+e$, where e is the elementary charge.

Which hadron could be the Σ^+ particle?

A

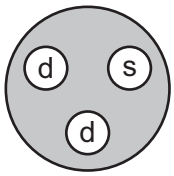

B

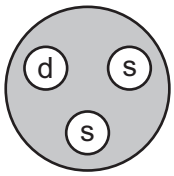

C

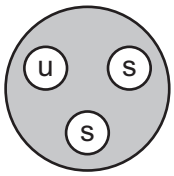

D

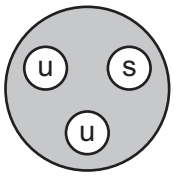

key
u = up quark
d = down quark
s = strange quark

Permission to reproduce items where third-party owned material protected by copyright is included has been sought and cleared where possible. Every reasonable effort has been made by the publisher (UCLES) to trace copyright holders, but if any items requiring clearance have unwittingly been included, the publisher will be pleased to make amends at the earliest possible opportunity.

To avoid the issue of disclosure of answer-related information to candidates, all copyright acknowledgements are reproduced online in the Cambridge Assessment International Education Copyright Acknowledgements Booklet. This is produced for each series of examinations and is freely available to download at www.cambridgeinternational.org after the live examination series.

Cambridge Assessment International Education is part of the Cambridge Assessment Group. Cambridge Assessment is the brand name of the University of Cambridge Local Examinations Syndicate (UCLES), which itself is a department of the University of Cambridge.

© UCLES 2019